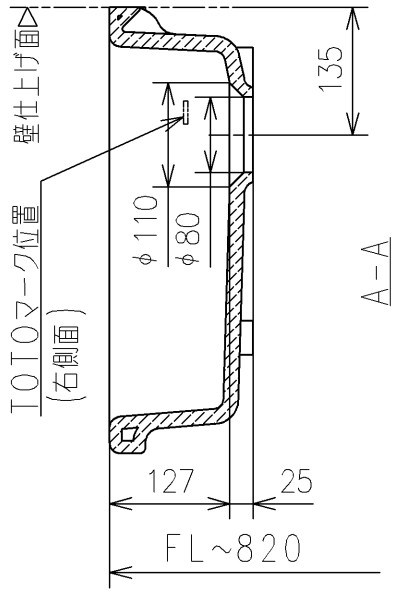

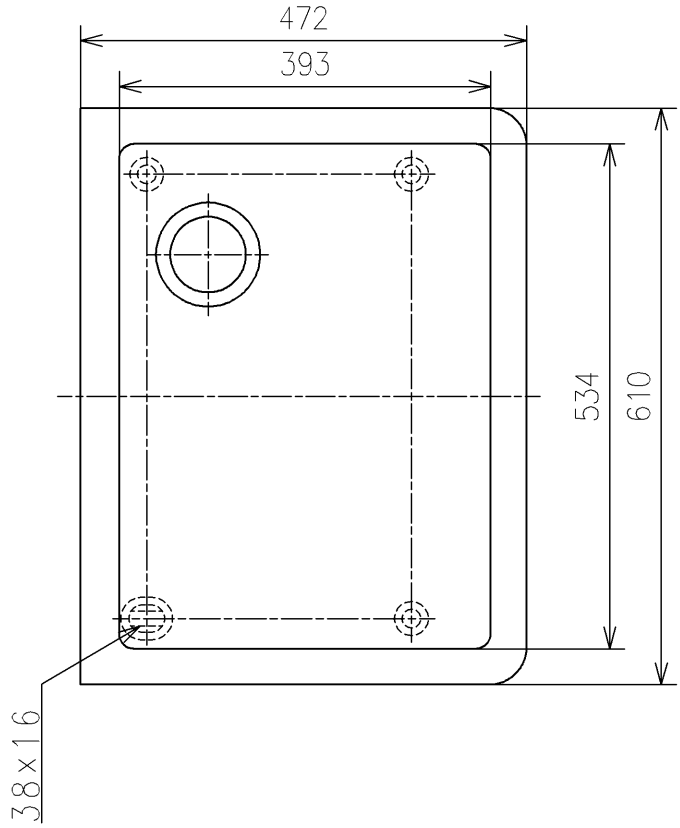

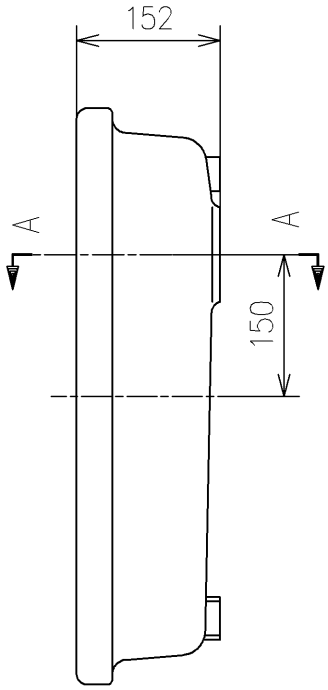

TOTO		UNIT mm	SCALE 1:8	DATE 2025-May-30	DRAWN hiroshi.yabe
TITLE 流し					CHECKED hiroshi.yabe
SINK					APPROVED tsubasa.miyake
REMARKS 小形					ITEM NUMBER SK7_Q

※日本販売品の衛生陶器の寸法許容差はJIS A5207に準ずる

PAGE No. 1/1 A4